OIL COOLER INSTALLATION ILLUSTRATION

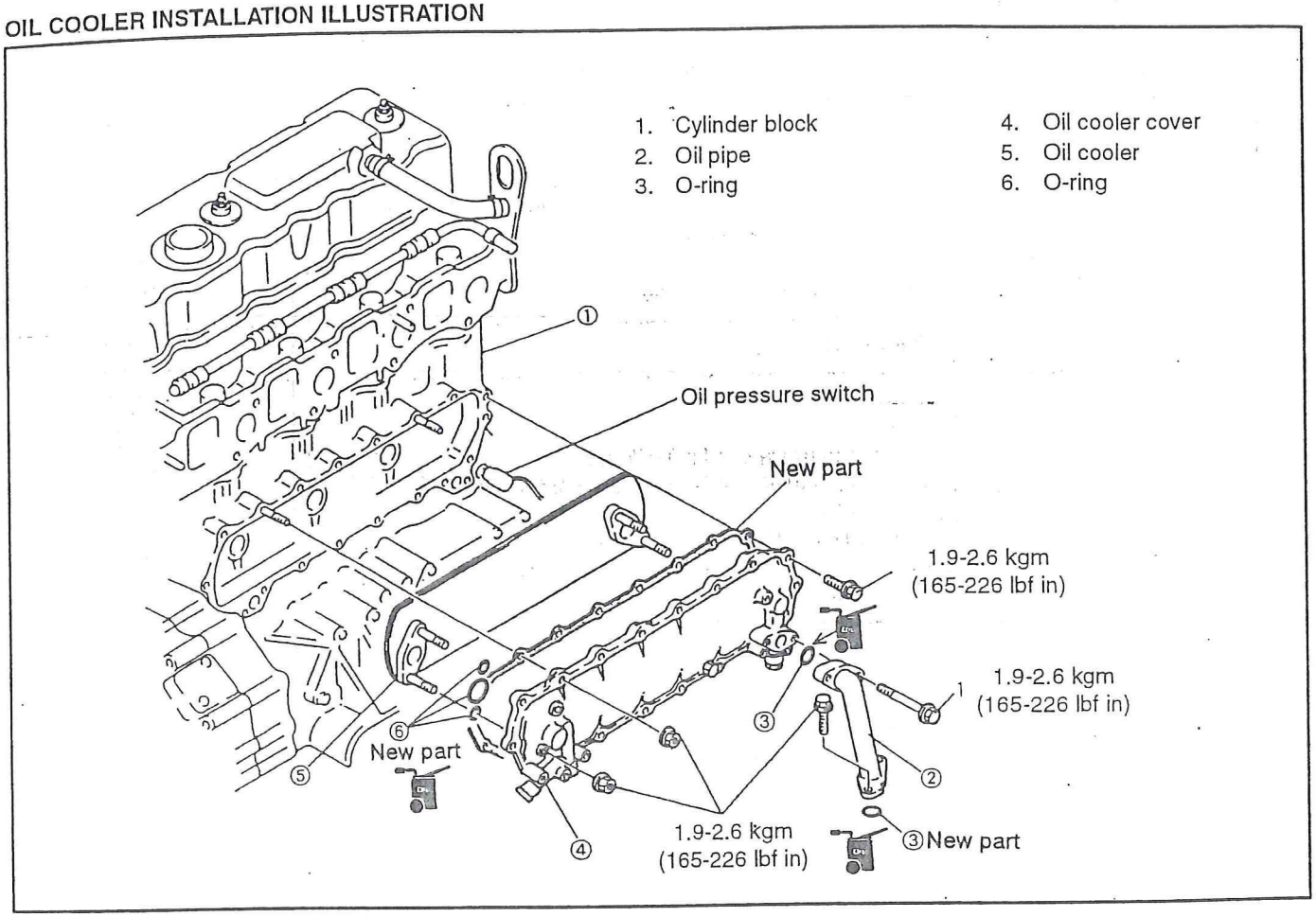

OIL LINE AND OIL PIPE INSTALLATION

1. Install the oil lines, using new sealing washers.
   Tightening torque:
   ① 1.0-1.3 kgm / (87-113 lbf in)
   ② 1.9-2.6 kgm / (165-226 lbf in)

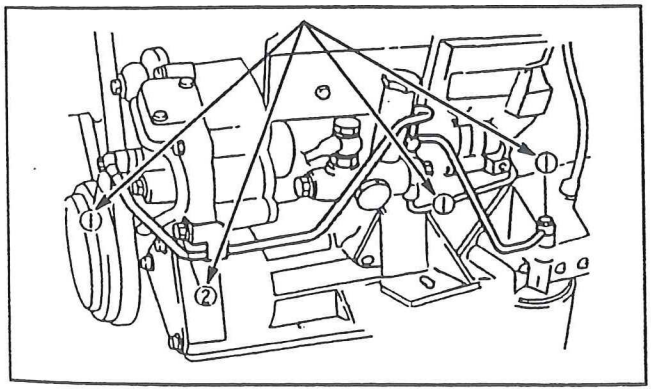

2. Install the oil pipe, using new O-rings and gaskets.
   Tightening torque: 1.9-2.6 kgm / (165-226 lbf in)

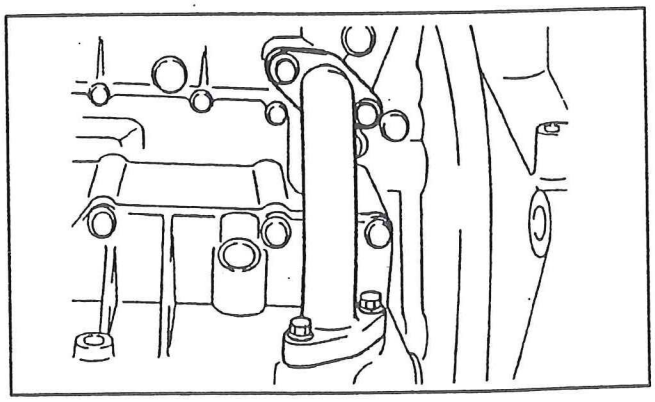

TROUBLESHOOTING GUIDE

Problems	Possible causes	Remedy
Hard starting **Engine spins slowly**	* Deterioration of oil * Insufficient oil	Replace Refill
Excessive oil consumption	* Wear or sticking of piston ring or piston ring grooves * Wear of piston or cylinder * Defective valve seal * Wear in valve stem or guide	Replace Replace Replace Replace
	Oil leakage	Repair
Decrease in oil pressure	* Insufficient oil * Oil leak * Wear or damage of oil pump rotor * Wear of plunger (in oil pump body) or fatigue of plunger spring * Clogged oil strainer * Excessive clearance in main bearing and connecting rod bearing	Refill Repair Replace Replace Clean Repair
Oil warning lamp lights during engine operation	* Drop in oil pressure * Insufficient oil * Defective oil pressure switch * Defective oil level sensor (if equipped) * Defect in electrical system	Same as above Refill Replace Replace Repair

Yale
Industrial Trucks

NOTES

Yale
Industrial Trucks

SECTION 5

5	COOLING SYSTEM

Mazda TM Engine Parts contact:
EngineParts@HeavyEquipmentRestorationParts.com Phone: 269 673 1638

Yale
Industrial Trucks

SECTION 5 – CONTENTS

COOLING SYSTEM

DESCRIPTION **PAGE NUMBER**

COOLING SYSTEM DIAGRAM

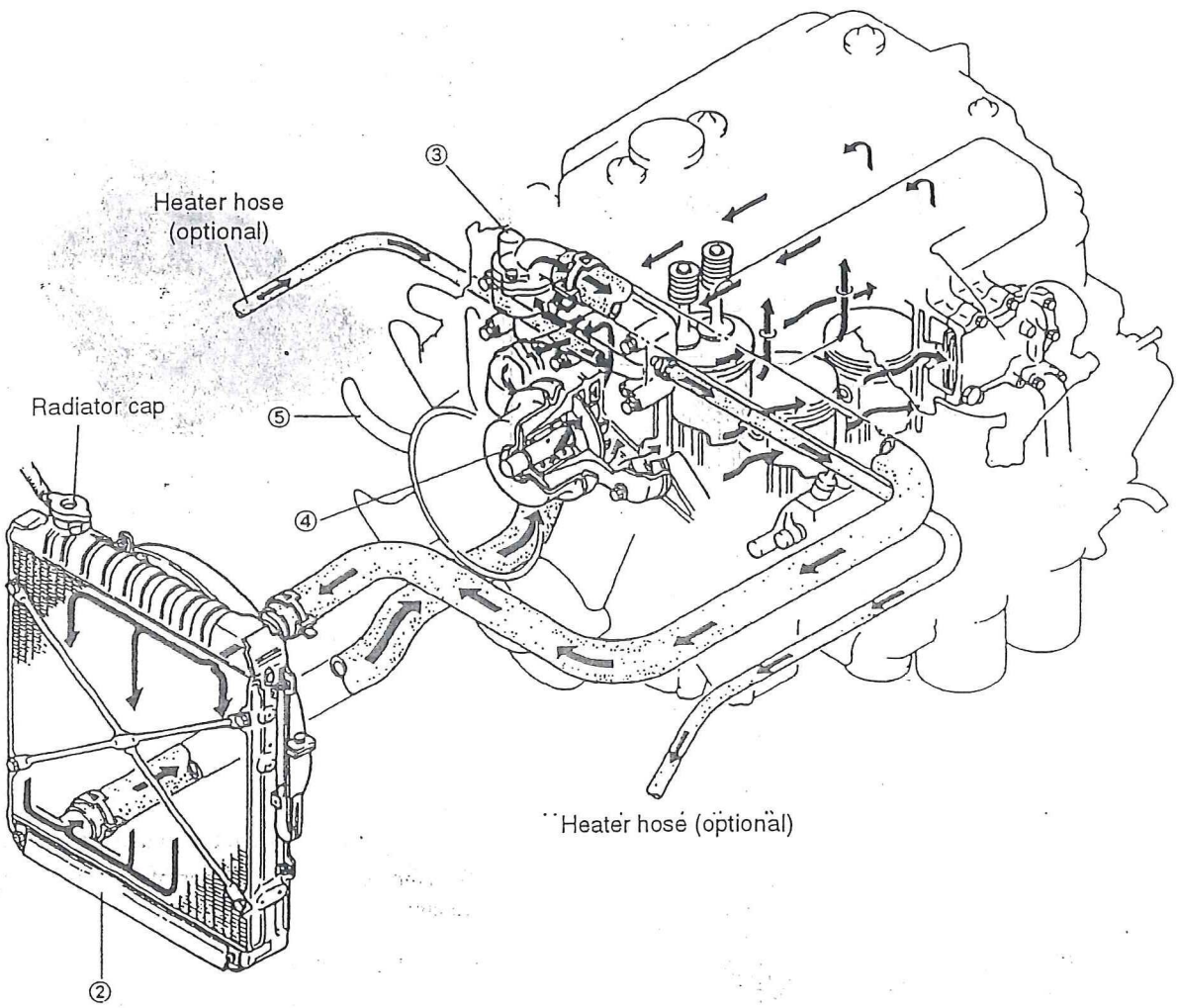

1. Radiator Cap
2. Radiator
3. Thermostat
4. Water pump
5. Cooling fan

COOLING SYSTEM SPECIFICATIONS

Cooling method		Water-cooled, V belt driven pump
Cooling system capacity (Complete system)		17 litres (17.97 qt)
Cooling system capacity (Engine only)		9.8 litres (10.36 qt)
Thermostat	Temperature at which thermostat begins opening valve	82°C 180°F
	Temperature at which the valve is completely opened	94°C 201°F
	Minimum lifting amount of fully opened valve	9.1 mm (.3583 in)
Water pump type		Centrifugal type
Cooling fan number of blades		7
Cooling fan diameter		460 mm / (18.1 in)
Fan belt tension (After belt break in) Deflection: @ 10 kg / (22 lb) pressure.		11-12 mm (.433-.472 in)

ENGINE BLOCK COOLING SYSTEM COMPONENTS

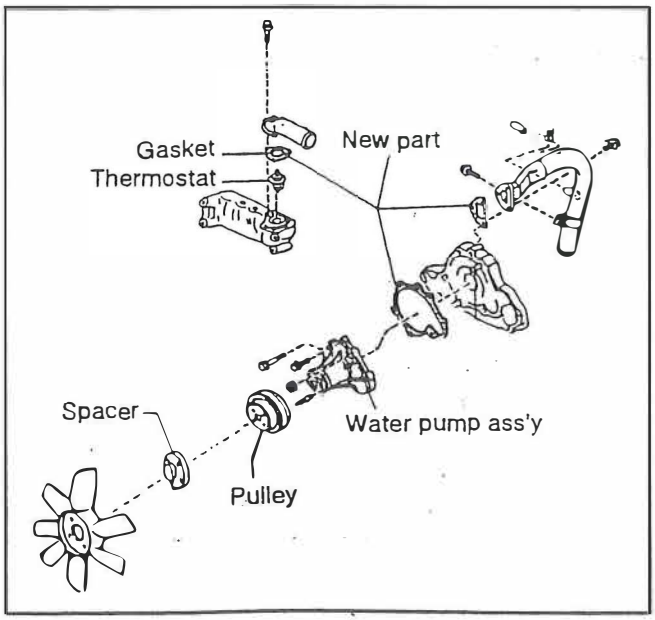

THERMOSTAT INSPECTION

1. Removal

(1) Remove the mounting bolts, and then remove the thermostat cover.
(2) Remove the thermostat gasket. Remove the thermostat from the thermostat casing.

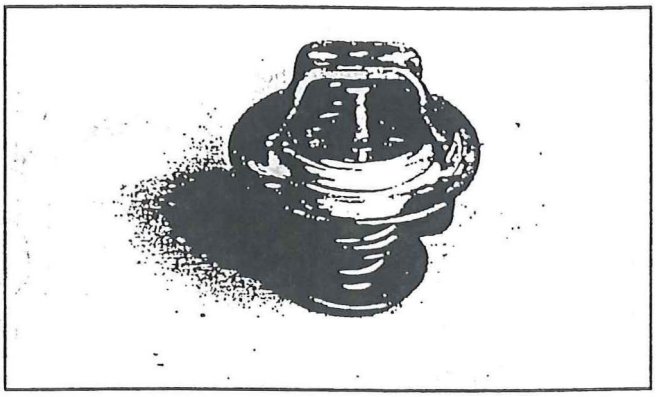

2. Inspection

(1) Visually inspect the thermostat. Check that the valve is closed at room temperature. Replace the thermostat if the valve is not closed properly.
(2) Put the thermostat into water, and gradually heat it.
(3) Check the temperature at which the valve starts to open.
(4) Check the temperature at which the valve is completely open.
(5) Check the amount thermostat valve opens.
(6) Replace the thermostat if it does not meet specifications.

See **"COOLING SYSTEM SPECIFICATIONS"**